# *Remote Maintenance Gateway*

# *RMG/941C(L,N)*

*with DNP/9535*

# Hardware Reference


**SSV Software Systems GmbH**
Dünenweg 5
D-30419 Hannover
Phone: +49 (0)511/40 000-0
Fax: +49 (0)511/40 000-40
Email: sales@ssv-embedded.de

Document Revision: 1.0
Date: 2021-05-19

# CONTENT

# 1 INTRODUCTION

This document describes the basic hardware components of the Remote Maintenance Gateway RMG/941C(L,N).

## 1.1 Safety Guidelines

**Please read the following safety guidelines carefully! In case of property or personal damage by not paying attention to this manual and/or by incorrect handling, we do not assume liability. In such cases any warranty claim expires.**

- The power supply should be in immediate proximity to the device.
- The power supply must provide a stable output voltage at 12..24 VDC ±10%. The output power should be at least 10 W.
- Please pay attention that the power cord or other cables are not squeezed or damaged in any way when you set up the device.
- Do NOT turn on the power supply while connecting any cables, especially the power cables. This could cause damaged device components! First connect the cables and THEN turn the power supply on.
- The installation of the device should be done only by qualified personnel.
- Discharge yourself electrostatic before you work with the device, e.g. by touching a heater of metal, to avoid damages.
- Stay grounded while working with the device to avoid damage through electrostatic discharge.
- The case of the device should be opened only by qualified personnel.

## 1.2 Conventions

| Convention | Usage |
|---|---|
| **bold** | Important terms and information |
| *monospace* | Filenames, Pathnames, program code, command lines |

**Table 1: Conventions used in this document**

## 1.3 Features and Technical Data

| | |
|---|---|
| **Processor** | |
| **Manufacturer / Type** | Atmel ATSAM-A5D35 SoC |
| **Clock speed** | 528 MHz |
| **Memory** | |
| **RAM** | 256 MB SDRAM |
| **Flash** | 4 MB NOR memory |
| **Storage media** | 1x internal microSD card holder |
| **Interfaces** | |
| **Ethernet** | 1x 10/100 Mbps (RJ45) |
| **CAN** | 1x via screw terminal with CAN 2.0A/2.0B support |
| **COM (Service Port)** | 1x 6-pin connector |
| **Antenna** | 1x SMA male connector for LTE antenna |
| **Special Functions** | |
| **Watchdog** | 1x Timer watchdog (hardware-based, software-configurable)<br>1x Power supervisor (hardware-based) |
| **SIM card** | 1x Mini-SIM card holder (accessible from the outside) |
| **Displays / Control Elements** | |
| **LEDs** | 1x Power<br>1x System status (programmable)<br>2x LAN LED for Ethernet interface |
| **Electrical Characteristics** | |
| **Power supply range** | 12 .. 24 VDC ±10% from external power supply |
| **Power consumption** | < 15 W |
| **Mechanical Characteristics** | |
| **Protection class** | IP20 industrial case for 35 mm DIN-rail mounting |
| **Mass** | < 150 g |
| **Dimensions** | 112 mm x 100 mm x 22.5 mm |
| **Operating temperature** | 0 .. 60 °C |
| **Storage temperature** | -40 .. 85 °C |
| **Standards and Certifications** | |
| **EMC** | CE |
| **Environmental standards** | RoHS, WEEE |

**Table 2: Features and technical data**

## 1.4 RMG/941CL: Features LTE Module

| LTE Module | |
|---|---|
| **Mobile radio standards** | GSM/UMTS/HSPA+/LTE |
| **Transfer rates** | 150 Mbps peak download, 50 Mbps peak upload |
| **Frequency bands LTE** | B1/B3/B5/B7/B8/B20 |
| **Frequency bands WCDMA** | B1/B5/B8 |
| **Frequency bands GSM/GPRS** | GSM850/GSM900/DCS1800/PCS1900 |
| **Authentication** | PAP, CHAP, CHAT, none |
| **Supported APNs** | Telekom, Vodafone, 02, E-Plus, user-defined |

**Table 3: Features LTE module**

## 1.5 RMG/941CN: Features NB-IoT Module

| NB-IoT (LTE Cat NB1) Module | |
|---|---|
| **Mobile radio standards** | GSM/LTE |
| **Transfer rates LTE Cat M1** | 375 Kbps peak download, 375 Kbps peak upload |
| **Transfer rates LTE Cat NB1** | 32 Kbps peak download, 70 Kbps peak upload |
| **Transfer rates GSM** | **GPRS:** 107 Kbps peak download, 85.6 Kbps peak upload<br>**EDGE:** 296 Kbps peak download, 236.8 Kbps peak upload |
| **Frequency bands LTE Cat NB1** | **LTE FDD:**<br>B1/B2/B3/B4/B5/B8/B12(B17)/B13/B18/B19/B20/B26/B28 |
| **Frequency bands LTE Cat M1** | **LTE FDD:**<br>B1/B2/B3/B4/B5/B8/B12(B17)/B13/B18/B19/B20/B26/B28<br>**LTE TDD:** B39 |
| **Frequency bands GSM/GPRS** | GSM850/GSM900/DCS1800/PCS1900 |
| **Authentication** | PAP, CHAP, none |
| **Supported APNs** | 1nce |

**Table 4: Features NB-IoT module**

# 2 OVERVIEW

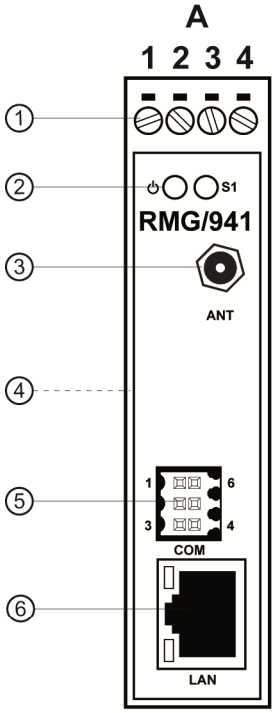


① Screw Terminals A1 - A4 (Power + CAN)
② Power LED + User LED S1 (programmable)
③ Antenna Connector (RMG/941CL,N)
④ DIN-rail Mounting (backside)
⑤ Service Port
⑥ Ethernet Interface LAN

**Figure 1: Overview RMG/941C(L,N)**

# 3 PINOUTS

## 3.1 Ethernet Interface


| Pin | Name | Function |
|---|---|---|
| 1 | TX+ | 10/100 Mbps LAN, TX+ |
| 2 | TX- | 10/100 Mbps LAN, TX- |
| 3 | RX+ | 10/100 Mbps LAN, RX+ |
| 4 | --- | Bob-Smith Termination |
| 5 | --- | Bob-Smith Termination |
| 6 | RX- | 10/100 Mbps LAN, RX- |
| 7 | --- | Bob-Smith Termination |
| 8 | --- | Bob-Smith Termination |

**Table 5: Pinout Ethernet interface**

| LED | Function |
|---|---|
| **Green (left)** | 10/100BASE-T link/activity |
| **Yellow (right)** | Not Connected |

**Table 6: Ethernet LED functions**

## 3.2 Screw Terminals

| Terminal | Function |
|---|---|
| **A1** | CAN Low |
| **A2** | CAN High |
| **A3** | Vin 24 VDC ±10% |
| **A4** | Ground |

**Table 7: Pinout screw terminals**

## 3.3 Service Port


| Pin | Name | Function |
|---|---|---|
| 1 | RXD1 | COM1 Serial Port: RS232 RXD |
| 2 | TXD1 | COM1 Serial Port: RS232 TXD |
| 3 | GND | Ground |
| 4 | RCM | COM1 Serial Port: Remote Console Mode |
| 5 | CTS1 | COM1 Serial Port: RS232 CTS |
| 6 | RTS1 | COM1 Serial Port: RS232 RTS |

**Table 8: Pinout service port**

= Cable bridge

To create a **serial connection** between the RMG/941C and a PC an **adapter cable** and a **null modem cable** are necessary.

The adapter cable is connected with the PC via the null modem cable like shown in **fig. 2**.

**Table 9** shows which service port pins must be connected with the pins of a Sub-D male connector (DTE, data terminal equipment) to build an adapter cable.

| Service Port | Sub-D Male Connector (DTE) |
|---|---|
| Pin 1 (RXD) | Pin 2 (RXD) |
| Pin 2 (TXD) | Pin 3 (TXD) |
| Pin 3 (GND) | Pin 5 (GND) |
| Pin 4 (RCM) | --- |
| All other pins are not connected. | |

**Table 9: Pinout adapter cable**

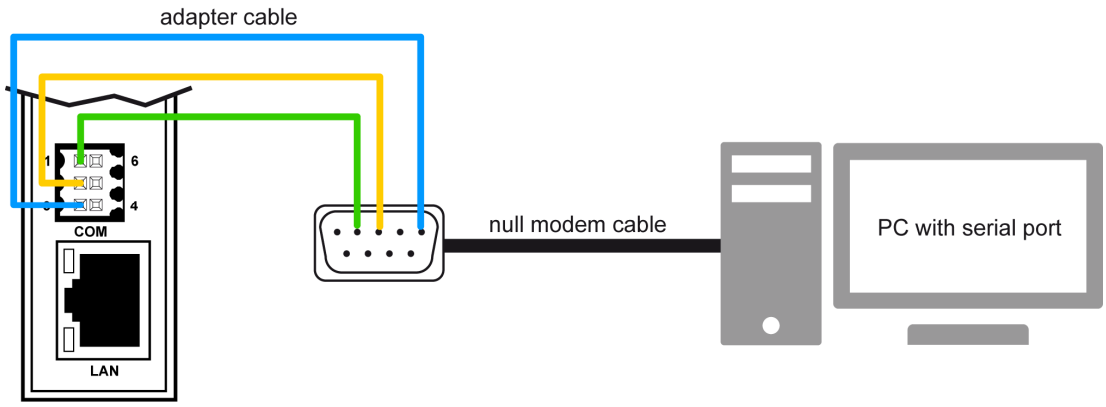


**Figure 2: Serial connection between RMG/941C and PC**

# 4 SIM CARD

The internal SIM card of the RMG/941CL and RMG/941CN can be changed through the slot on the backside.

To remove the SIM card just push it gently with a screw driver until you hear a soft "click". The SIM card is ejected a few millimeters and can be pulled out easily.


**Figure 3: Removing the SIM card**

To insert the SIM card just push it by hand as deep as possible into the slot.

**Please note:**
Pay attention to the correct orientation of the SIM card like shown in **fig. 4**!

Then use a screw driver to push it gently further into the slot until you here a soft "click".

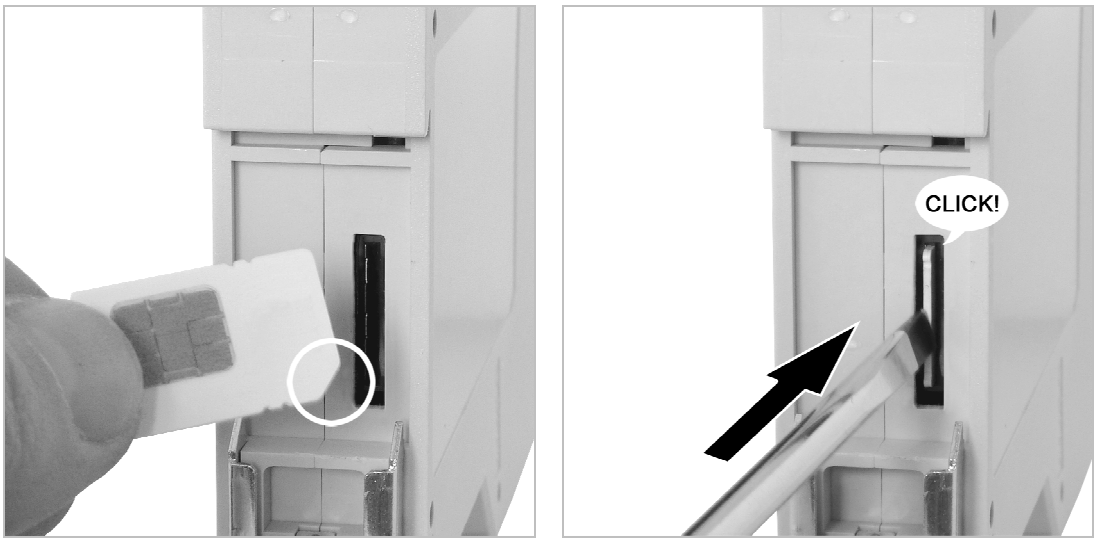


**Figure 4: Inserting the SIM card**

# 5 HELPFUL LITERATURE

- RMG/941C first steps
- DNP/9535 hardware reference
- SSV Web ConfigTool User Manual

# CONTACT

**SSV Software Systems GmbH**
Dünenweg 5
D-30419 Hannover

Phone: +49 (0)511/40 000-0
Fax: +49 (0)511/40 000-40
E-mail: sales@ssv-embedded.de

Internet: www.ssv-embedded.de
Forum: www.ssv-comm.de/forum

# DOCUMENT HISTORY

| Revision | Date | Remarks | Name | Review |
|---|---|---|---|---|
| 1.0 | 2021-05-19 | First version | WBU | SSC |